PolyBox™

Edition II

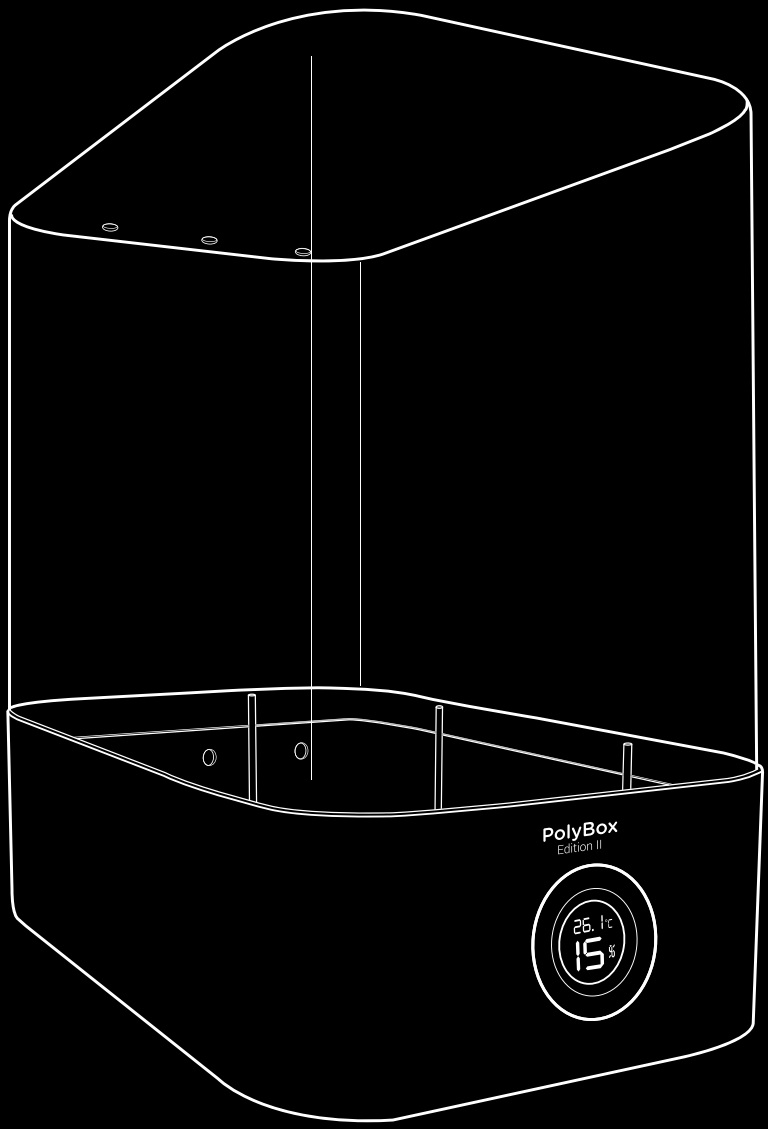

Operation Manual

CONTENTS

Introduction	4
Important Safety Instructions	5
Specifications	6
Information on Disposal for Users of Waste Electrical & Electronic Equipment	6
Package contents	7
Essential Parts of the PolyBox™	8
Setting up your PolyBox™	10
Contact Information	12

INTRODUCTION

Thank you for purchasing the PolyBox™ from Polymaker! With PolyBox™ you'll experience no more 3D printing problems caused by filaments absorbing moisture such as extreme oozing, rough surface quality, weaker 3D prints, 3D printer damages and so on!

Polybox™ includes a built-in high-precision hygrometer and silica gel desiccant sachets to control and absorb moisture from the air. The humidity within the box is maintained below 15% to prevent the filament from absorbing moisture during the storage and even during the 3d printing process. It is specifically designed for Nylon, PVA, PolySmooth™ and other highly hygroscopic 3D printing materials. However, its good practise to keep all 3D printing filaments inside the PolyBox™ to preserve the optimum printing quality.

PolyBox™ is compatible with both 1.75mm and 2.85mm filaments and can contain up to two 1kg spools or one 3kg spool!

polymaker

IMPORTANT SAFETY INSTRUCTIONS

- Read these instructions.
- Keep these instructions.
- Heed all warnings.
- Follow all instructions.
- PolyBox™ comes with silica gel desiccant sachets, FDA certified, non-toxic, tasteless, non-corrosive, non-polluting. Do not use other types of desiccant.
- Do not eat the desiccant, if ingested, seek medical advice immediately.
- In case of desiccant contact with the eyes, flush with plenty of water and get medical attention.
- PolyBox™ contains small parts. Keep out of the reach of children or animals. Small parts may be hazardous if swallowed or may cause choking if ingested or inhaled.
- PolyBox™ contains a high-precision hygrometer including a button battery. Don't mistake batteries for pills. Don't store batteries near pills or in pill bottles. Don't leave them on bedside tables or place them loose in your pocket or purse. Look at every medicine you intend to swallow. Turn on the lights, put on your glasses, read the label and look at the medicine itself.
- Never put batteries in your mouth, to test, to hold, or for any reason. They are slippery and easily swallowed. Keep out of the reach of children or animals.
- Please dispose of batteries in a designated collection point.

SPECIFICATIONS

Desiccant type	Silica gel
Desiccant specifications	2*Desiccant sachets 100g
Supported filament spools	2 spools ≤ 1kg or 1 spool 3kg
Humidity range	10-99%
Accuracy	±5%
Resolution	1%
Response	10 seconds
Temperature range	-50~70 °C
Accuracy	±1 °C
Battery specifications	LR44*1
Product size	315(L)*190(W)*310(H)
Package size	196(L)*320(W)*320(H)
Product weight (without desiccants and wires)	1.150kgs
Package weight	1.700kgs

INFORMATION ON DISPOSAL FOR USERS OF WASTE ELECTRICAL & ELECTRONIC EQUIPMENT

- This symbol on the product and/or accompanying documents means that used electrical and electronic products should not be mixed with general household waste. For proper treatment, recovery and recycling, please take this product to a designated collection point where it will be accepted free of charge.
- Alternatively, in some countries you may be able to return your products to your local retailer upon purchase of an equivalent new product.
- Disposing of this product correctly will help save valuable resources and prevent any potential negative effects on human health and the environment, which could otherwise arise from inappropriate waste handling.
- Please contact your local authority for further details or your nearest designated collection point.
- Penalties may be applicable for incorrect disposal of this waste, in accordance with your national legislation.

PACKAGE CONTENTS

Your PolyBox™ package should contain the following:

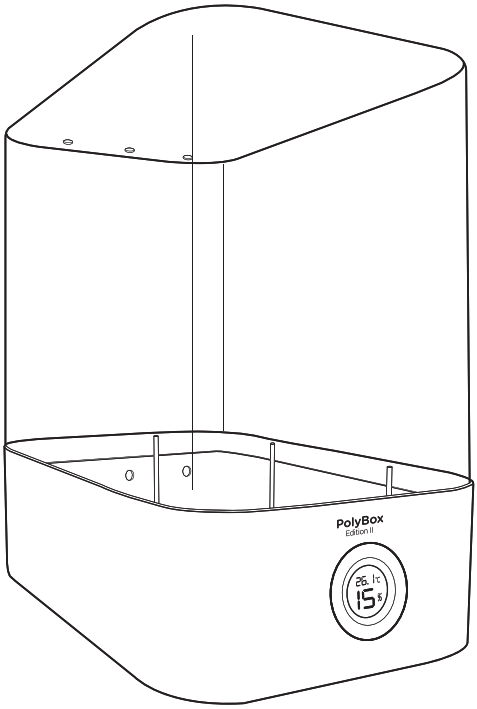

PolyBox™ (cover + base)
x1

Rubber Plug
x 6

Thermo-Hygrometer
x 1

Battery LR44
x 1

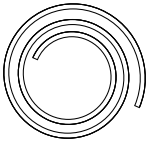

Filament Guide 150cm
x 1

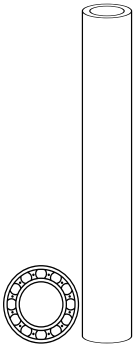

Rods x4
Bearings x8

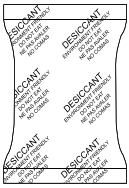

100g Silica
Gel Sachets x2

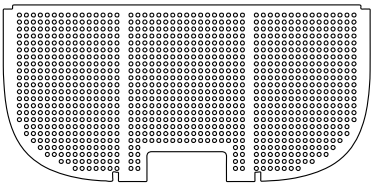

Front Grid
x1

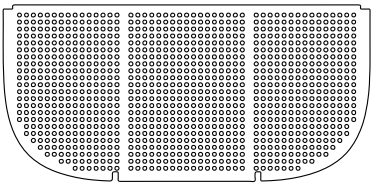

Back Grid
x1

ESSENTIAL PARTS OF THE POLYBOX™

1. **Base**
2. **Cover**
3. **Rubber Plugs**
4. **Desiccant Compartments**
5. **Thermo-Hygrometer**

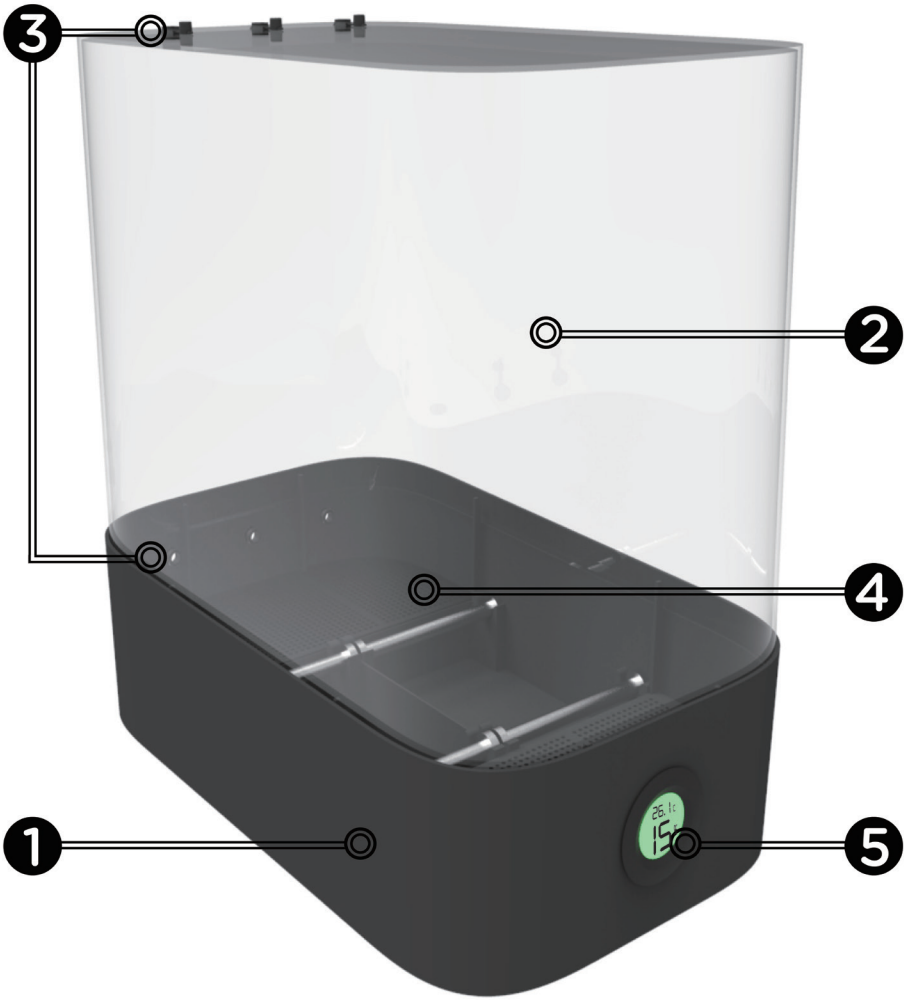
3
2
4
1
5

SETTING UP YOUR POLYBOX™

1 To install the hygrometer battery

Slide down the hygrometer battery cover.

Remove the battery from the package, insert it in the designed compartment and put back the cover.

Check if the front display switches on. When you notice that the hygrometer display is fading, replace the button battery 1.5V LR44.

Note: The provided battery will last approximately 3 months.

2 To install the rods

Slide two bearings onto both ends of the steal rod, then snap the rod and bearings into the PolyBox™

3 To install the desiccant sachets

Remove the set of desiccants from the package and check if the sealed bag is intact. If there are any leaks, please dry the sachets before using it. The provided desiccant bags can be dried in a microwave for 4 times 5min (defrost mode), make sure to flip the bags upside down between each iteration. Use oven mitts to touch the desiccant bags.

Note: other types of desiccant may not have the ability to recover and be reused.

Do not expose the desiccant sachets to the air for too long. We highly recommend silica gel for the type of desiccant.
Put the two desiccant bags into the PolyBox™, one in each compartment.

Close the two compartments with the two grids.

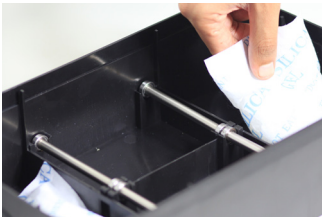

4 To install the filament guide

Cut the filament guide according to your need (Distance from the PolyBox™ to the 3D printer) and insert it in the rubber holes on the back or on the top.

5 To place the spool

Place the spool in the PolyBox™ and feed the filament through the rubber plug.

Note: Make sure the material is fully dried before putting it in the PolyBox™.

Place the cover on the PolyBox™.
You should feel a small friction which ensures the fit. Make sure the cover fits correctly in the base to ensure an airtight environment for the spools. Do not open the PolyBox™ too frequently and close all the unused rubber plugs to preserve the desiccant.

Gently pull the filament out to check if the spool rolls smoothly.
After 2 hours you should see the inside humidity dropping below 15%. The time will depend on the room humidity. The hygrometer should always display a humidity level below 15%.

Note : The minimum humidity level that can be displayed is 10%
If the hygrometer displays a humidity level above 20%, replace the desiccant.

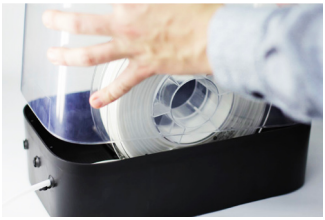

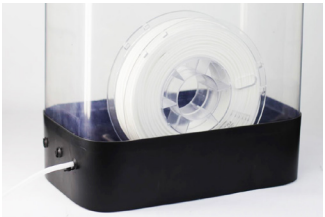

Caution:
Be careful, at the end of the spool, the filament might get stuck in the PolyBox™ and the 3d printer can drag the PolyBox™.

CONTACT INFORMATION

Visit polymaker.com and follow us on our social media channels for product updates, videos, tutorials and more!

facebook.com/Polymaker.3D

twitter.com/Polymaker_3D

youtube.com/Polymaker

instagram.com/Polymaker_3D

pinterest.com/Polymaker

thingiverse.com/Polymaker_3D

facebook.com/groups/Polymaker

For questions or further information, please contact us at:

701 Building
Fudan Science Park
1018 Miyun Road
YangPu District
Shanghai, PRC

E-mail: **inquiry@polymaker.com**

II

PolyBox™

第二版

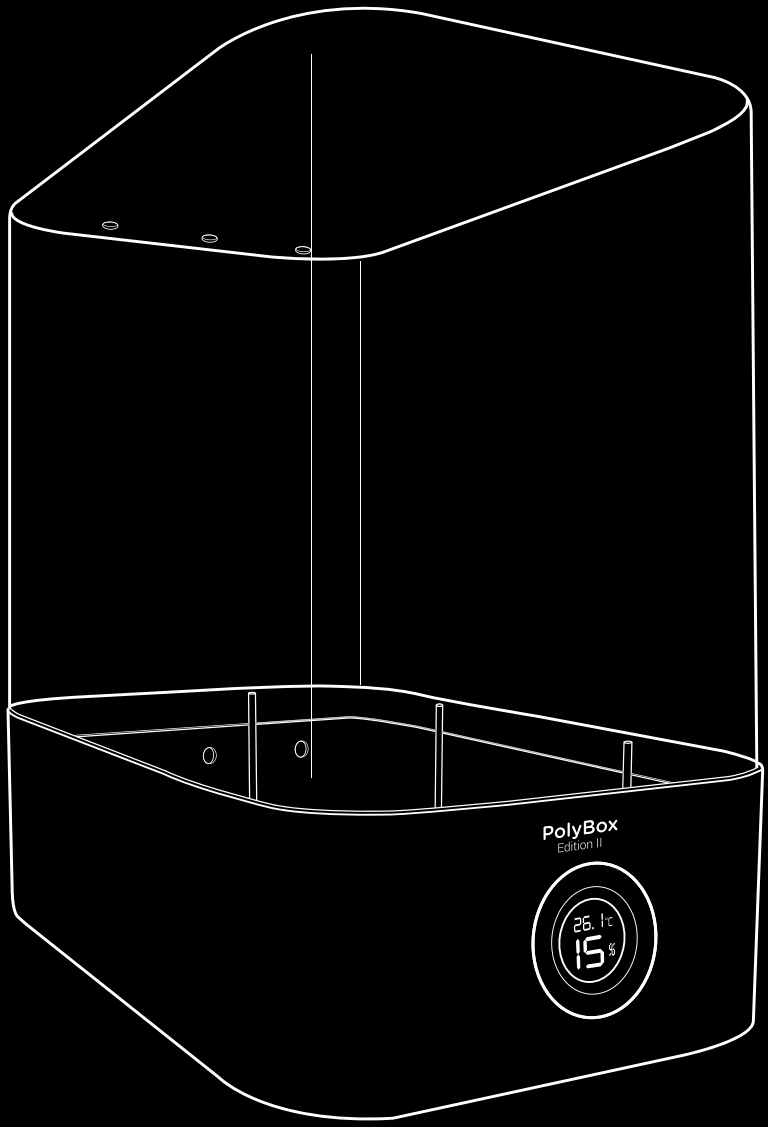

使用手册

polybox.polymaker.com

内容

产品概要	16
重要安全提示	17
规格参数	18
装清单	19
PolyBox™主要部件	20
组装PolyBox™	22
联系方式	24

产品概要

感谢您购买Polymaker出品的3D打印线材防潮盒（PolyBox™）。PolyBox™可以为您彻底解决3D打印材料长时间暴露在空气中吸水后造成的各种打印问题。例如多余的拉丝，模型表面毛糙，层间结合力降低，打印机堵头等现象。

PolyBox™内置高精度温湿度计，利用硅胶干燥剂吸收空气中的水分，使盒内的空气湿度长期保持在10%以下，能有效防止3D打印线材在打印和储存过程中吸水受潮。特别适合于Nylon，PVA，PolySmooth等因高吸水率而难以长期储存的3D打印材料。

PolyBox™兼容性强，可以放置2卷1kg以下或1卷3KG级别的线盘，同时兼容1.75mm和2.85mm线材。

polymaker

重要安全提示

- PolyBox™自带的干燥剂为硅胶干燥剂，通过FDA认证，无毒无味，无腐蚀，无污染，可与药品、食品直接接触。请勿使用其他种类干燥剂。
- 请将干燥剂置于儿童或动物无法接触的地方，请勿食用干燥剂，如误食后请及时就医。
- 如果硅胶干燥剂不慎入眼，请用大量水冲洗并及时就医。
- PolyBox™内包含细小零件，请置于儿童或动物接触不到的地方，若吞食细小零件可能会造成成噎塞或严重伤害。
- PolyBox™内的高精度温湿度计包含一枚纽扣电池，请不要让儿童玩纽扣电池，并让纽扣电池远离儿童；
- 为防止意外，请勿将电池置于口中。
- 在吞食药片时进行确认，以免将纽扣电池误认为药丸或药片而吞食。
- 请勿随意丢弃纽扣电池。
- 请勿随意丢弃丢弃电子温湿度计或参见当地电子垃圾分类处理办法。

规格参数

干燥剂类型	硅胶干燥剂
干燥剂规格	2组100g*2替换装
支持的3D打印线盘	2卷1KG以下线盘或1卷3KG线盘
湿度测量范围	10~99%
湿度测量准确度	±5%
湿度显示分辨率	1%
湿度刷新周期	10秒
温度测量范围	-50~70℃
温度测量精度	±1℃
电池规格	LR44*1
产品尺寸	315(L)*190(W)*310(H)
包装尺寸	196(L)*320(W)*320(H)
产品重量 （不含干燥剂和线材）	1.150kgs
包装重量	1.700kgs

包装清单

包装清单如下：

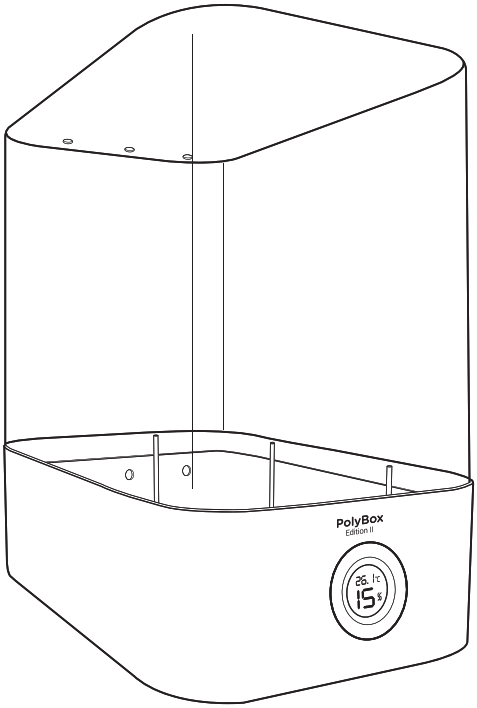

PolyBox™
（透明盒盖及底座） *1

橡胶孔塞 *6

温湿度计 *1

温湿度计电池
LR44 *1

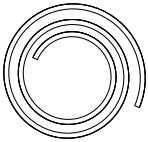

出丝导管 150cm*1

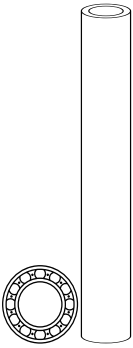

线盘架轴 *4
轴承 *4

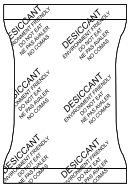

硅胶干燥剂 2组,
每组100g*2

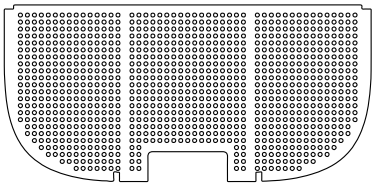

干燥剂槽前盖板
x1

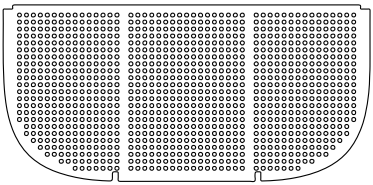

干燥剂槽后盖板
x1

PolyBox™主要部件

1. 底座
2. 盒盖
3. 导空及橡皮孔盖
4. 干燥剂槽
5. 温湿度计

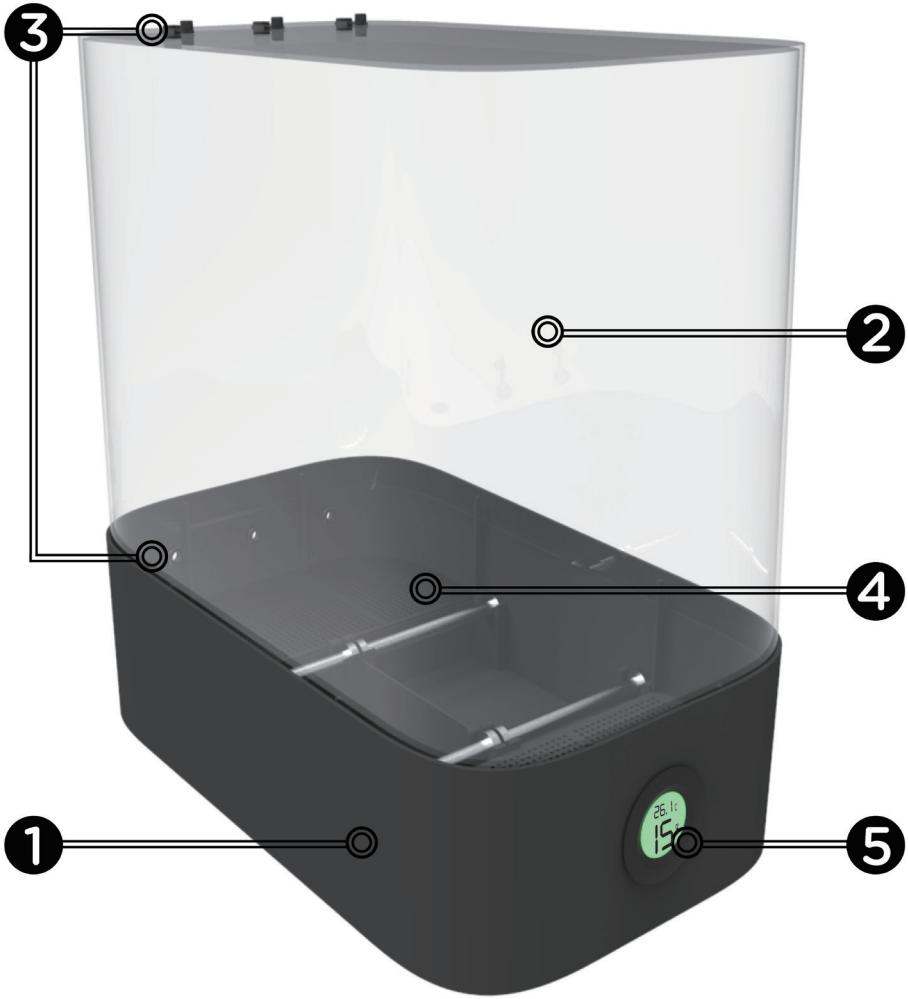
3
2
4
1
5

组装PolyBox™

1 安装PolyBox™温湿度计电池
拨下PolyBox™内置的温湿度计电池盖板。
取出包装中的LR44纽扣电池，+级朝外放入温湿度计中，并盖上盖板。
检查温湿度显示是否正常。温湿度计LCD屏幕显示暗淡时，请更换电池。电池规格为1.5V LR44 1颗。

注意：附送电池预计能使用3个月左右时间。

2 装入钢管

将两个轴承推入一根钢管两端，然后将两个轴承端分别卡入Polybox™的底座上。

3 放入干燥剂包
取出干燥剂，检查干燥剂包装真空度是否完好，如果漏气请烘干干燥剂后再使用。失效的硅胶干燥剂可以在80-90°C下烘干8小时后恢复干燥能力。
注意：其他种类干燥剂可能不具备恢复能力。请使用硅胶干燥剂，不建议使用其他种类干燥剂。
在PolyBox™两侧干燥剂槽内各放入1包100g硅胶干燥剂。
安装干燥剂隔板。

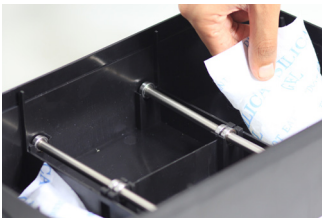

3 安装出丝导管
请根据您的需要裁剪出丝导管长度，并插入橡胶塞孔内。

4 放置3D打印线材
将料盘放入Polybox™中并将线材穿过橡胶塞孔。
注意：请确保放入Polybox™中的线材是充分干燥过的。
将透明罩放置回Polybox™。在放置透明罩时你应该会感受到一个小的摩擦以确保安装到位。确保透明罩和基座安装正确从而保证线材能处在密封环境中。为了保护干燥剂，不要频繁地打开Polybox™并合上所有未使用的橡胶塞孔。
轻轻地抽出耗材检查抽丝是否顺滑。
2小时候你会发现湿度会降到15%以下。这个时间将取决于房间的湿度。然后湿度计会始终显示湿度低于15%。
注意：温湿度计湿度显示最低值为10%。如果温湿度计湿度显示超过20%，请更换Polybox™内的干燥剂

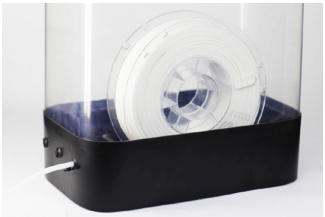

注意：
请注意观察线材使用情况，在线材将近用完时取出。防止线材末端因弯折而卡在出丝导管内，拖动PolyBox™造成安全事故。

联系方式

欢迎用社交媒体分享您的使用心得：

facebook.com/Polymaker.3D

twitter.com/Polymaker_3D

youtube.com/Polymaker

instagram.com/Polymaker_3D

pinterest.com/Polymaker

thingiverse.com/Polymaker_3D

facebook.com/groups/Polymaker

更多信息欢迎邮件咨询：

上海市杨浦区密云路1018号复旦科技园701号楼

E-mail: **inquiry@polymaker.com**

www.polymaker.com